Low-power monosteady / unsteady multiharmonic oscillator

An Overview of the

The CD4047B is able to work in either an unsteady or unsteady mode. It requires an external capacitor to

(Between pins 1 and 3) and an external resistance (lead

Between feet 2 and 3), to determine the output pulse width in the unsteady mode, and the output frequency in the unsteady mode.

Monstable mode is done by entering a high level at the astable pin or at Pin input of the low level implementation. Output frequency (50% duty cycle) end Q and It is determined by the timing elements. The Oscillator oscillator output is twice the frequency of the Q end; a 50% duty cycle is not guaranteed.

Unsteady modes include: up along the level or down the level at the-trigger input. The chip can be retrigger ed by synchronizing ascending along the + trigger and retriggering the input. Upper reset end input high level, reset output Q is low level, High-level level.

Single-stable trigger features

- Up or descending line trigger
- Output pulse width is independent of the trigger pulse duration
- Pulse width can be set to retrigger
- External counters: Long pulse width achieved with small RC elements
- Fast recovery time is basically independent of the pulse width

Features

- Wide power supply voltage range: 3.0V to 15V
- High immunity: 0.45 VDD()
- Low-power consumption, TTL is compatible

Special Features

- Low power consumption: a special CMOS oscillator configuration
- Unistable (single) or unsteady (free-run) work
- Actual compensation buffer output
- Just one external R and C

Application:

- Frequator
- Timiming circuit
- Delay Application
- Enenvelope wave
- Frequency-doubling
- Frequency-sharing

- Pulse width accuracy maintained at duty cycle close to
  100%

Multi-harmonic oscillator characteristics

- Free Operating mode
- The 50% duty cycle is the
- Oscillator output is available
- Good steady-state frequency
- Typical = ± 2% + 0.03% / ℃ @100 k H z
- Frequency = ± 0.5% + 0.015% / ℃ @10 kHz
- Deviation (Circuit correction frequency VDD= 10V ± 10%

Connection diagram

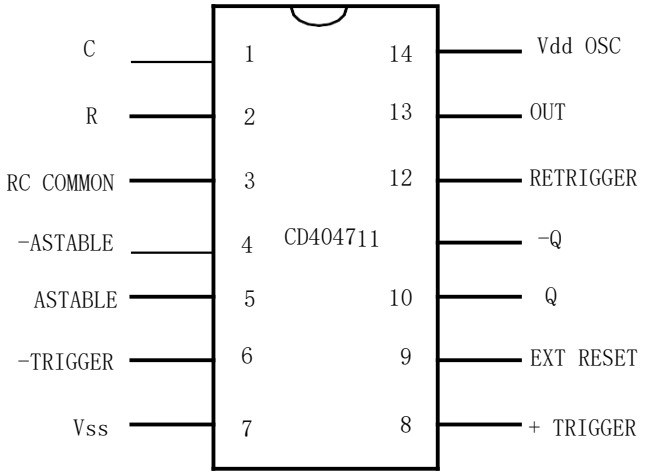

Functi on table

Fun ctio n	Connect the port			From from pulse	Typical output period or pulse width
	With the VDD	With the VSS	Input pulse to the		
Multiharmonic oscillator					
Run Run	4,5,6,14	7,8,9,12		10,11,13	t A (10,11)=4.10RC
Real gating control	4,6,14	7,8,9,12	5	10,11,13	t A (13)=2.20RC
Supplementary door control	6,14	5,7,8,9,12	4	10,11,13	
Single-stable trigger					
Rising edge trigger	4,14	5,6,7,9,12	8	10，11	
Negative edge trigger	4,8,14	5,7,9,12	6	10，11	t M (10,11)=2.48RC
Reggtrigger	4,14	5,6,7,9	8,12	10，11	
▪	14	5,6,7,8,9,12	Figu re 1	Figu re 1	Figu re 1

Note 1: Resistance between ports 2 and 3, and the capacitance between ports 1 and 3.

Typical application of the External Countdown

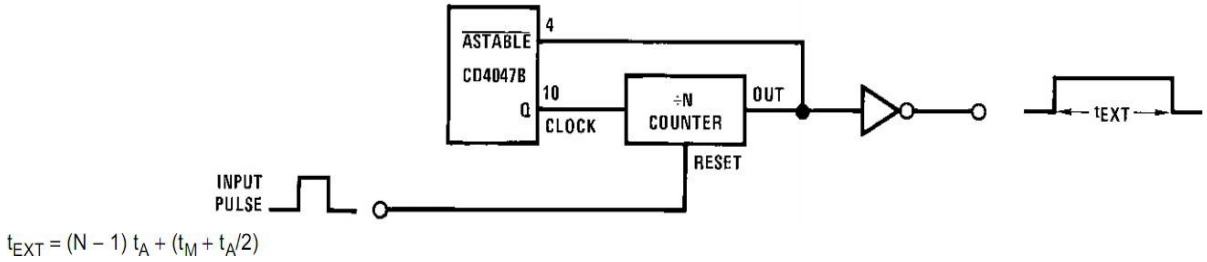
ASTABLE
CD4047B
4
10
Q
CLOCK
÷N
COUNTER
OUT
RESET
INPUT
PULSE
tEXT
tEXT = (N − 1) tA + (tM + tA/2)

Figure 1

Block diagram

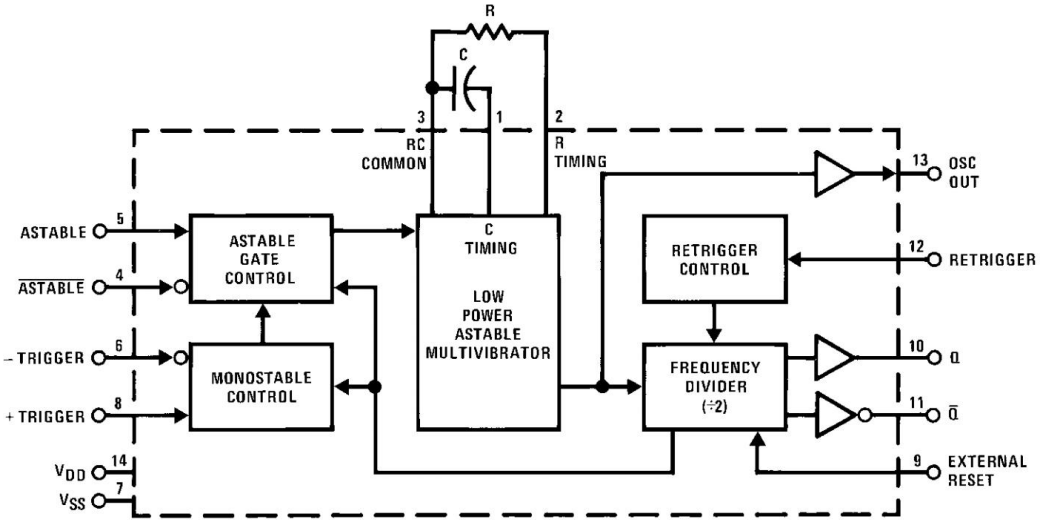

Logic diagram

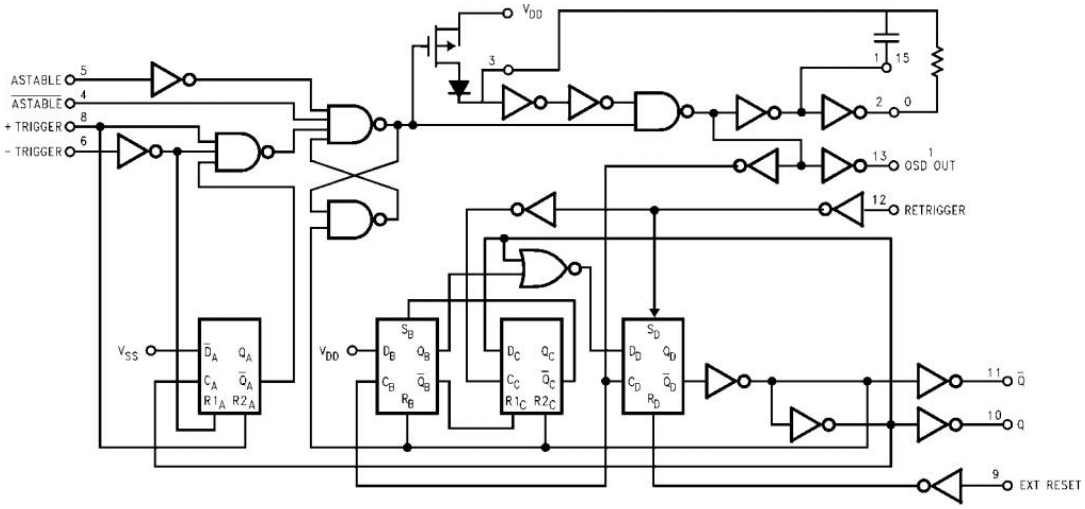

* Special input protection circuits that allow for large input voltage fluctuations.

Absolute maximum rating (Note 2)

(Note 3)

(Note 3)

DC Power Voltage (VDD) -0.5V to + 18V DC input voltage (VIN) -0.5V to VDD+0.5V DC Temperature Range (TS) -65 ℃ to + 150 ℃ + 75 ℃

Power dissipation (P D)

exceeding the double column inline chip security of the get

Small shape 500mW

Recommended working conditions

DC input voltage (VDD) 3V to 15V DC Input Voltage (VIN) 0 to VDD DC Storage Operating Temperature Range (Ta) 0 ℃ to

Note 2: " Absolute maximum rating means 700mW Maxmaximum of the chip,

To guarantee, does not mean that can be

done in these limiting lead temperatures (TL)

(Welding, 10 seconds) 260 ℃ s

Work under the conditions.

Note 3: VSS=0V,, unless otherwise specified.

DC electric gas characteristics (Note 3)

Symbol	Parameters	Conditions	-40℃		25℃			85℃		Unit:
			Min	Max	Min	Typ	Max	Min	Max	
IDD	Static current	V DD =15V		20 40 80			20 40 80		150 300 800	uA uA
Vol	Low-level output voltage	| Io | <1uA V DD =5V V DD =10V V DD =15V		0.05 0.05 0.05		0 0 0	0.05 0.05 0.05		0.05 0.05 0.05	V V V
Voh	High-level output voltage	| Io | <1uA V DD =5V V DD =10V V DD =15V	4.95 9.95 14.95		4.95 9.95 14.95	5 10 15		4.95 9.95 14.95		V V V
Vil	Low-level input voltage	V DD =5V,V O =0.5V or 4.5V V DD =10V,V O =1V or 9V V DD =15V,V O =1.5V or 13.5V		1.5 3.0 4.0		2.25 5.5 6.75	1.5 3.0 4.0		1.5 3.0 4.0	V V V
Vih	High-level input voltage	V DD =5V,V O =0.5V or 4.5V V DD =10V,V O =1V or 9V V DD =15V,V O =1.5V or 13.5V	3.5 7.0 11.0		3.5 7.0 11.0	2.75 5.5 8.25		3.5 7.0 11.0		V V V
Iol	Low-level output current (Note 4)	V DD =15V,V O =1.5V	0.52 1.3 3.6		-0.44 -1.1 -3.0	0.88 2.25 8.8		0.36 0.9 2.4		mA mA mA
Ioh	High-level output current (Note 4)	V DD =5V,V O =4.6V V DD =10V,V O =9.5V V DD =15V,V O =13.5V	-0.52 -1.3 -3.6		-0.44 -1.1 -3.0	-0.88 -2.25 -8.8		-0.36 -0.9 -2.4		mA mA mA

Iin	Input-in current	V DD =15V,V IN =0V V DD =15V,V IN =15V		-0.3 0.3			-0.3 0.3		-1.0 1.0	μA

AC Electrical Characteristics (Note 5)

Ta=25 ℃, CL=50pF,RL=200K, Enter the Tr=Tf=20nS, unless otherwise specified.

Symbol	Parameters	Conditions	Min	Typ	Max	Unit:
t PHL,t PLH	Unsteady-state delay time astableTo the OSC output	V DD =5V		200	400	ns
		V DD =10V		100	200	ns
		V DD =15V		80	160	ns
t PHL,t PLH	Astable,astableTo the Q,Q	V DD =5V		550	900	ns
		V DD =10V		250	500	ns
		V DD =15V		200	400	ns
t PHL,t PLH	+ Trigger,-Trigger to theQ	V DD =5V		700	1200	ns
		V DD =10V		300	600	ns
		V DD =15V		240	480	ns
t PHL,t PLH	+ Trigger,Retrigger to theQ	V DD =5V		300	600	ns
		V DD =10V		175	300	ns
		V DD =15V		150	250	ns
t PHL,t PLH	Reseet to Q,Q	V DD =5V		300	600	ns
		V DD =10V		125	250	ns
		V DD =15V		100	200	ns
t THL,t TLH	Conversion Time: Q,Q, Osc output	V DD =5V		100	200	ns
		V DD =10V		50	100	ns
		V DD =15V		40	80	ns
t WL,t WH	Minimum input pulse duration	V DD =5V		500	1000	ns
		V DD =10V		200	400	ns
		V DD =15V		160	320	ns
t RCL,t FCL	+ Trigger,Retrigger,Rise Down Time	V DD =15V			15	us
					5	us
					5	us
C IN	Average input capacitor	Any input		5	7.5	pF

Timing diagram

Unsteady-state mode Monstable mode Retrigger mode

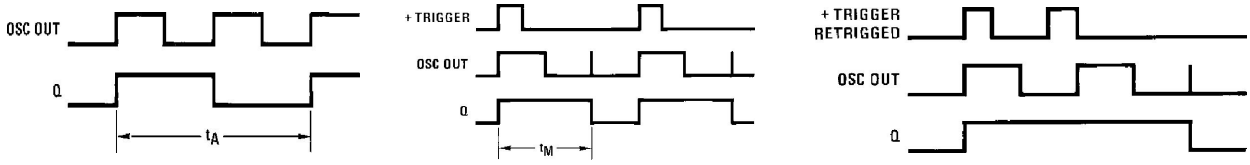
OSC OUT
Q
t_A
+ TRIGGER
OSC OUT
Q
t_M
+ TRIGGER
RETRIGGED
OSC OUT
Q

Physical dimensions of inches (mm), unless otherwise indicated

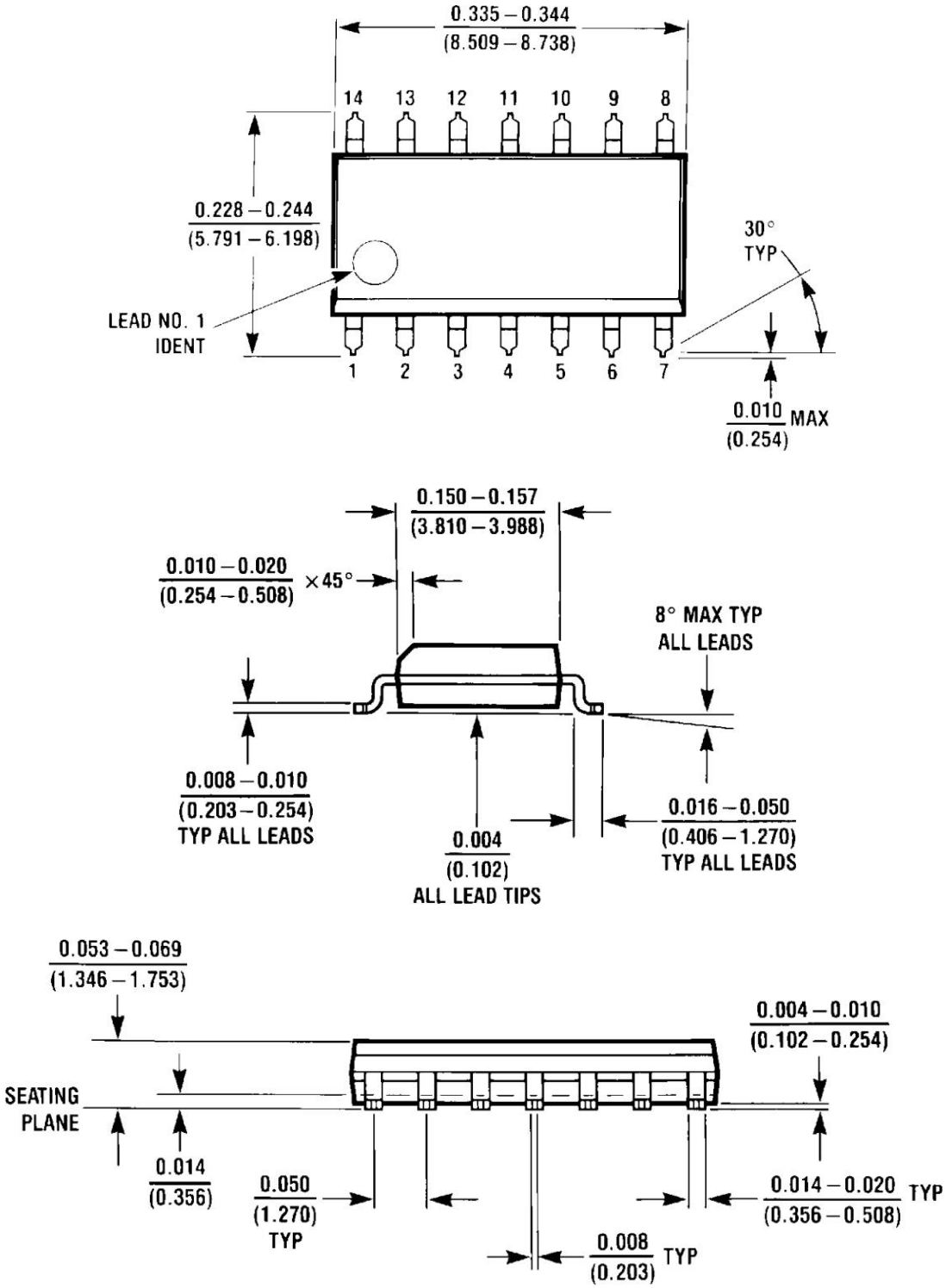

14 Pin Small Form Integrated Circuit (S O I C), JEDECMS-120,0.150 " Narrow Package Number M 14A